FRAME	KW
MS63 1-2	0.18
MS63 2-2	0.25
MS63 3-2	0.37
MS63 1-4	0.12
MS63 2-4	0.18
MS63 3-4	0.25

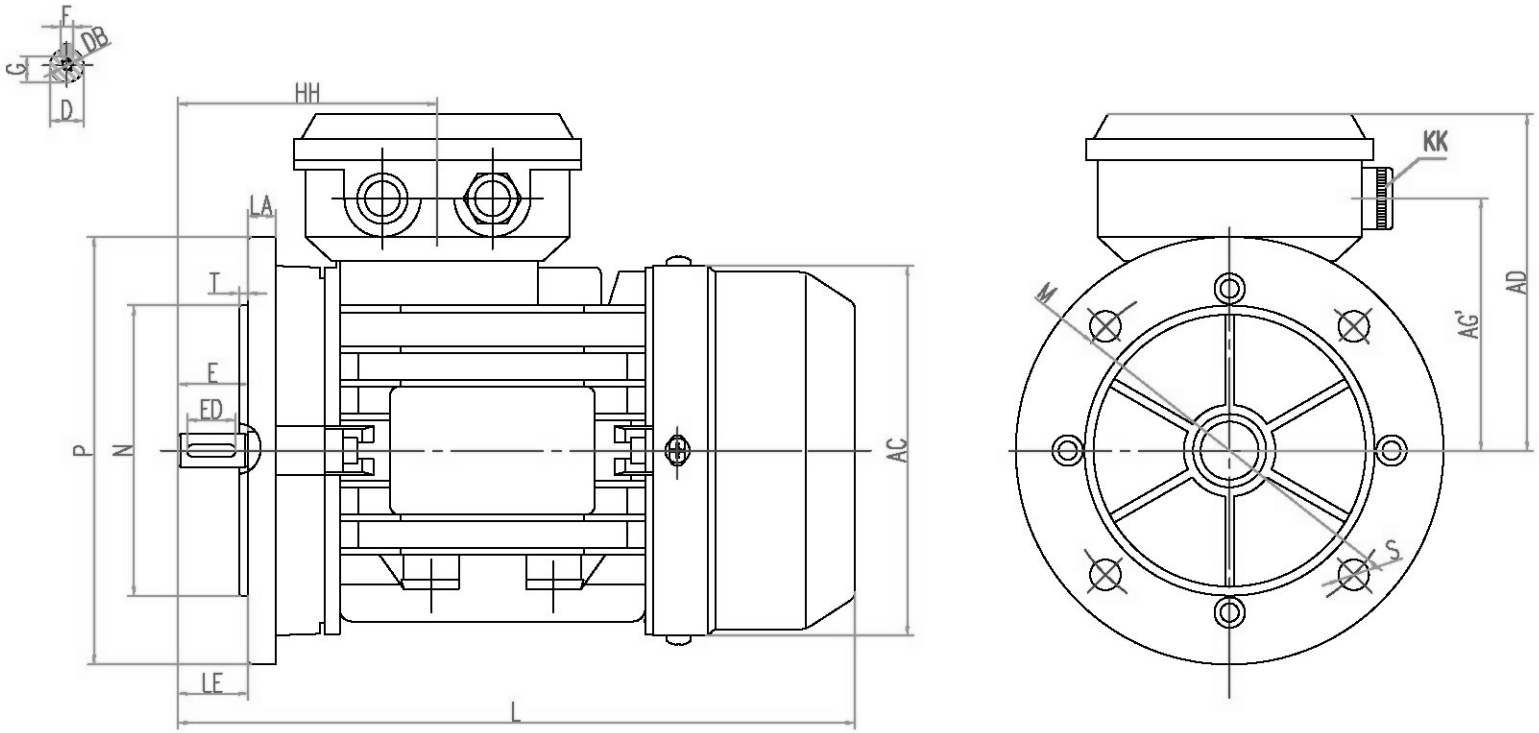

CLIENT:

FRAME	KW	RPM
VOLTS		

OUTLINE DIMENSIONS FLANGE MOUNTED MOTORS

AC	AD	AG'	KK	L	LA	HH	LE	M	N	P	S	T
ϕ130	110	82	1-M16×1.5	230	9	85	23	ϕ115	ϕ95	ϕ140	4-ϕ10	3.0

SHAFT EXT.DE ONLY

D	DB	E	ED	F	G
ϕ11	M4×10	23	16	4	8.5

CUSTOMER APPROVAL _____ _____

SIGNATURE DATE

63 V1/B5
DIMEMSION OUTLINE

ELECTRAMO

DATE		CHECKED BY	
DESIGBED BY		APPROVED BY	
ISSUE	DATE	CERTIFIED BY	
ISSUE	DATE	CERTIFIED BY	
ISSUE	DATE	CERTIFIED BY	
ISSUE	DATE	CERTIFIED BY	