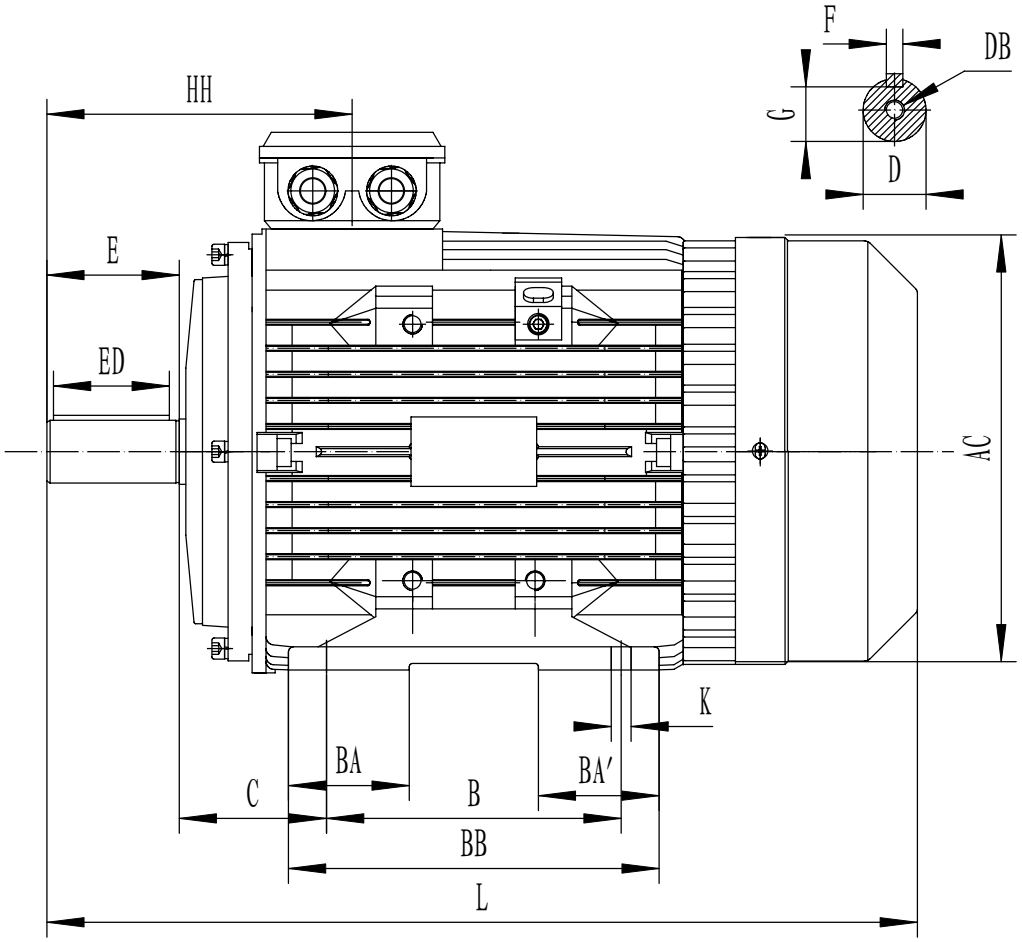


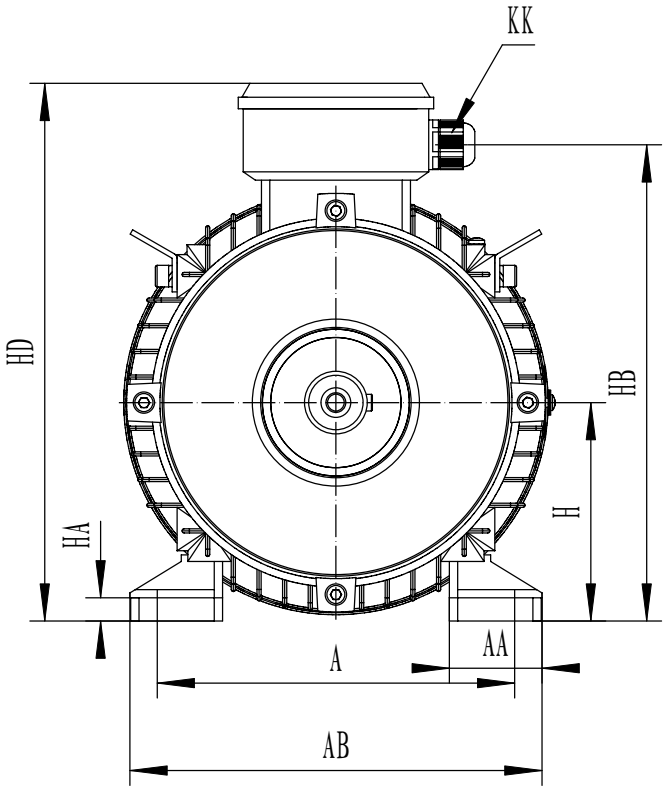


| CLIENT: | | |
|---|---|---|
| | KW | RPM |
| FRAME | 132LJ | |
| VOLTS | | |

| FRAME | KW |
|---|---|
| HMS132LJ-4 | 7.5 |

| FOOT-OR-FLANGE-MOUNTING | | | | | | | | | | | | | | | | | | | | SHAFT EXT.DE ONLY | | | | | | WEIGHT(kg) | | | | | | | | | |
|---|---|---|---|---|---|---|---|---|---|---|---|---|---|---|---|---|---|---|---|---|---|---|---|---|---|---|---|---|---|---|---|---|---|---|---|
| A | AA | AB | AC | B | BA | BA" | BB | C | H | HA | HB | HD | HH | K | KK | L | | | | | D | DB | E | ED | F | G | | | | | | | | | |
| 216 | 36 | 252 | 270 | 178 | 51 | 51 | 212 | 89 | 132 | 14 | 291.5 | 325 | 184.5 | 12X16 | 2-M25X1.5 | 525 | | | | | 38 | M12X28 | 80 | 70 | 10 | 33 | | | | | | | | | |

CUSTOMER APPROVAL

SIGNATURE

DATE

| HMS132LJ B3 | DATE | | | CHECKED BY | |
|---|---|---|---|---|---|
| | DESIGNED BY | | | APPROVED BY | |
| DIMENSION OUTLINE | ISSUE | | DATE | CERTIFIED BY | |
| | ISSUE | | DATE | CERTIFIED BY | |
| DWG # | ISSUE | | DATE | CERTIFIED BY | |
| | ISSUE | | DATE | CERTIFIED BY | |