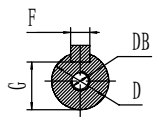

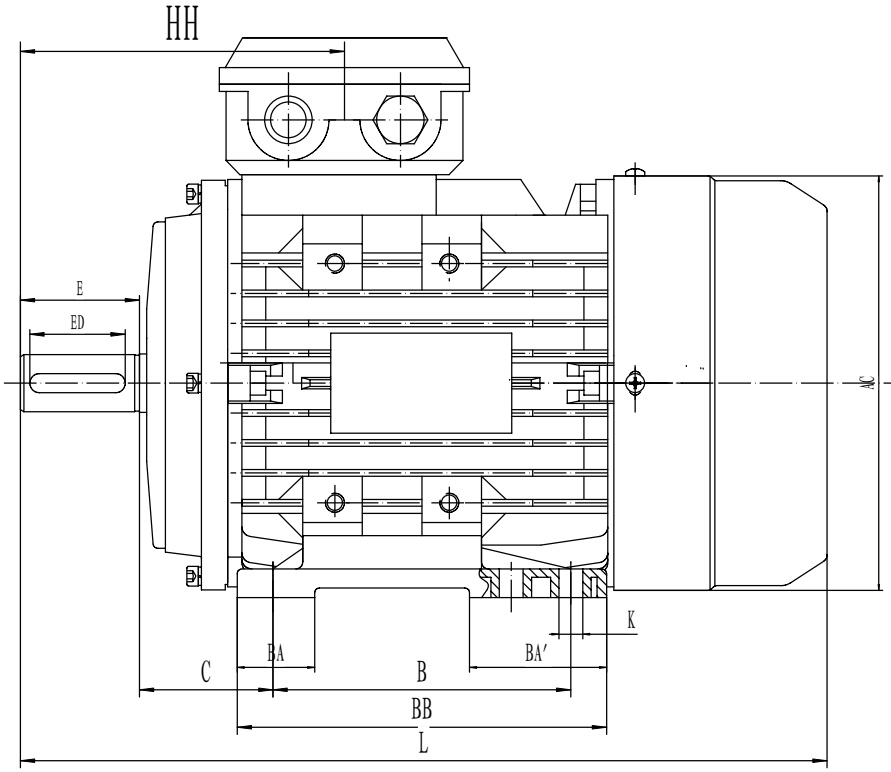

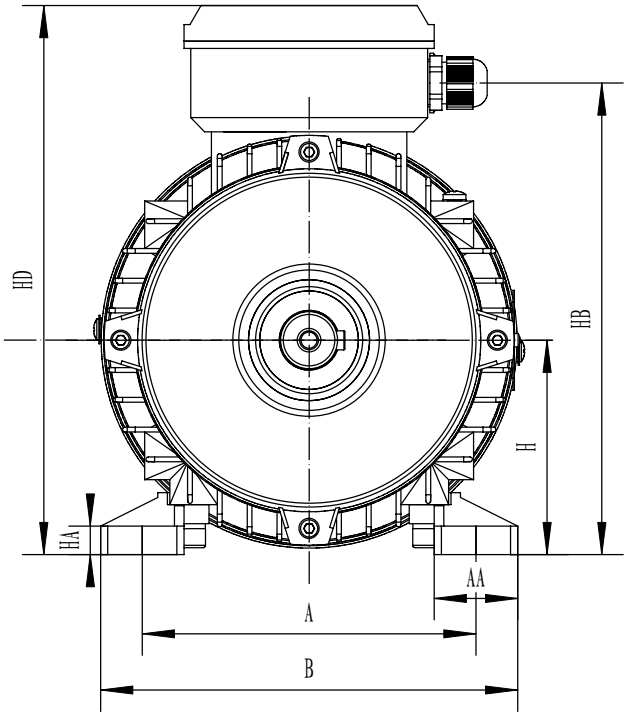

CLIENT:

FRAME	KW	RPM
90M		
VOLTS		

FRAME	POWER (KW)
HMS90L1-2	1.5
MS90L1-4	1.1
MS90L1-6	0.75

M

FOOT-OR-FLANGE-MOUNTING																					SHAFT EXT.DE ONLY						WEIGHT(kg)									
A	AA	AB	AC	B	BA	BA"	BB	C	H	HA	HB	HD	HH	K	KK	L					D	DB	E	ED	F	G										
140	35	195	185	125	31	59	159	56	90	12	200	235	133	10x13	1-M20X1.5	335					24	M8X20	50	40	8	20										

CUSTOMER APPROVAL

SIGNATURE

DATE

HMS90L1B3	DATE		CHECKED BY	
	DESIGNED BY		APPROVED BY	
DIMENSION OUTLINE	ISSUE	DATE	CERTIFIED BY	
	ISSUE	DATE	CERTIFIED BY	
DWG #	ISSUE	DATE	CERTIFIED BY	
	ISSUE	DATE	CERTIFIED BY	